USER GUIDE

SET OF 2 ADJUSTABLE BIKE WALL MOUNTS

Two identical mounts to store two bikes upright, front wheel held in a jaw adjustable from 15 to 71 mm and locked by two steel pins. This guide covers fixing, adjustment and everyday use.



REF. PACK2SUPPVELOMURNOIR · ROAD, GRAVEL, MTB: TYRES FROM 15 TO 71 MM · REINFORCED ABS AND STEEL, 60 KG PER MOUNT ON A SOLID WALL

01 · GETTING STARTED

FIXING THE MOUNTS TO THE WALL

Before drilling

- **A solid wall only**: concrete, solid brick, sound masonry. Plasterboard, timber, hollow blocks and light partitions need suitable fixings, and the 60 kg load per mount is only stated for a wall and fixings able to carry it.
- The height: with the bike standing on its rear wheel, measure from the floor to the top of the front wheel. The base goes at that height, so the rear wheel touches the floor or nearly.
- The spacing between the two mounts: at least the width of the wider handlebar, or stagger them in height so the bars overlap.
- A drill, a 6 mm bit suited to the wall, a screwdriver, a pencil, a spirit level.

Fixing, step by step, for each mount

1. **Mark the six holes** with the base held flat against the wall, level, at the measured height.
2. **Drill at 6 mm,** to the depth of the plugs, then blow the dust out of the holes.
3. **Push the six plugs in** flush with the wall and screw the base on with the six screws, crosswise, without crushing the ABS.
4. **Fit the central rail** onto the base, then position the two arms, left and right, on the rail.
5. **Insert the two metal pins:** they lock the arms at the chosen width (next page).
6. **Pull hard on the mount,** downwards and towards you, before hanging the bike: nothing must move. Same check on the second mount.

Specifications

Contents	**2 mounts, 12 plugs, 12 screws**	Material	**Reinforced ABS, steel pins**
Dimensions	**110 × 70 × 82 mm**	Weight	**approx. 100 g each**
Tyres	**15 to 71 mm, 9 positions**	Max. load	**60 kg each, solid wall**
Fixings	**Ø 6 × 30 mm, screws 3.5 × 28 mm**		

SAFETY

- The hold depends on the wall, the plugs and how they are fitted, not on the mount: on a hollow wall, the plugs supplied are not suitable.
- Both **locking pins** of each mount must be in place before hanging a bike.
- Never let go of the bike before checking that it is fully seated in the jaw.

THE SIDE HOOKS

They take a lock or a light accessory, not a third bike.

02 · DAY TO DAY

ADJUSTING, HANGING, UNHOOKING

Setting the width, mount by mount

1. **Read the tyre width** on its sidewall, in millimetres or inches: a 2.25 inch tyre is about 57 mm. Each mount is set for the bike it takes.
2. **Pick the notch just below it:** the 43 mm position for a 50 mm tyre, the 22 mm position for a 28 mm tyre. The tyre is gripped firmly without being crushed.
3. **Pull out the pins,** slide the arms along the rail to the chosen position, then put the pins back: they lock the arms.

Hanging and unhooking

1. **Lift the bike by the frame,** front wheel up, and push the front tyre into the jaw, right to the bottom.
2. **Check** that the tyre is firmly gripped and the rear wheel rests on the floor or nearly, then let go.
3. **To unhook,** lift the bike slightly to free the tyre, then step back.

Why by the tyre

The hold is on the tyre, not on the rim: no scratches, no buckling, and a carbon wheel touches nothing. The bike takes up the width of a handlebar on the wall instead of the length of a bike on the floor.

Care

Glance at the screws and the pins every few months; retighten if a base has developed play. Keep the tyres inflated: a flat tyre no longer holds in the jaw.

IF SOMETHING GOES WRONG

- **The bike tips or slips**: setting too wide, or tyre not pushed in fully. Go down one notch.
- **The jaw will not close**: the tyre is wider than 71 mm (fat bike). This mount is not suited to it.
- **A base moves**: wrong plug for the wall or hole too wide. Take it down, fill, drill again next to it or change the fixing.

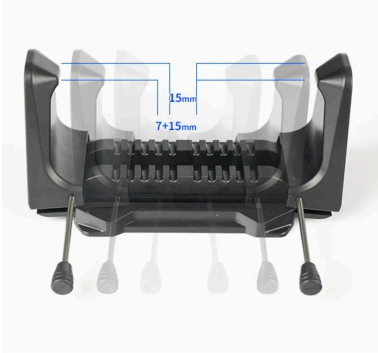

The arms slide along the rail in 7 mm steps, from 15 to 71 mm; the steel pins lock them.

HEAVY BIKE

An electric bike is lifted as a pivot: rear wheel on the floor, raise the front by the frame and tip it up, rather than lifting at arm's length.

On video

Independent tutorials, scan to watch.

Installing Bike Hooks for Vertical Storage
Tony Marchand · English

How to use wall plugs. Wall plug tips and drilling tips.
POUSE around the HOUSE · English

Need help?

velkyne.com/contact
Our team answers your questions about fitting and compatibility.

© 2026 Velkyne. All rights reserved.